Data Sheet

Article number: 23017761120K
Description: E+G Handwheel
VR.200 FP-A20-K

Measures

VR.FP-A

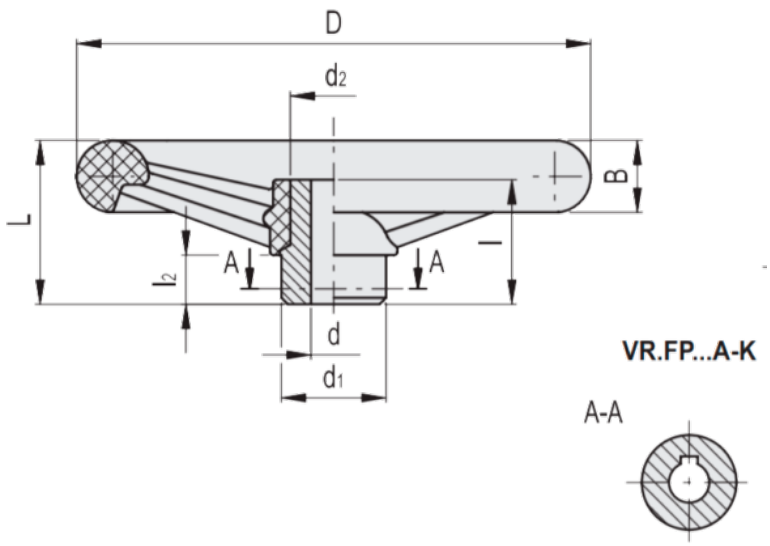

B	= 26	l	= 43
b	= 6	L	= 57
C (N*m)	= 300	L (J)	= 16
D	= 198	l2	= 15
d1	= 40	t	= 22.8
d2	= 30.5		
d\\\'	=		
d\\\'\\\'	=		

Product drawings and brochures of any kind may contain errors for which Brd. Klee A/S cannot be liable.